R300 DCT+

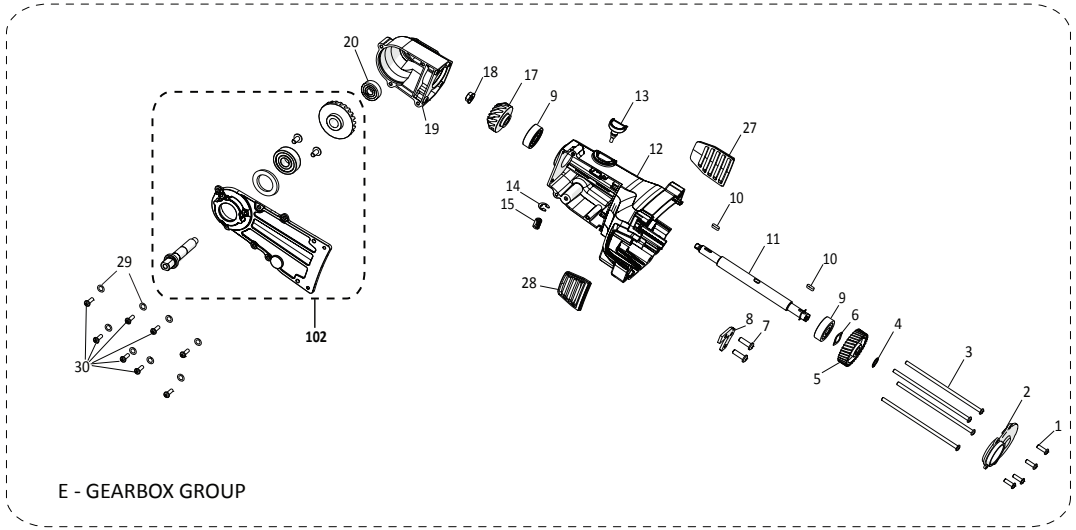

E - GEARBOX GROUP

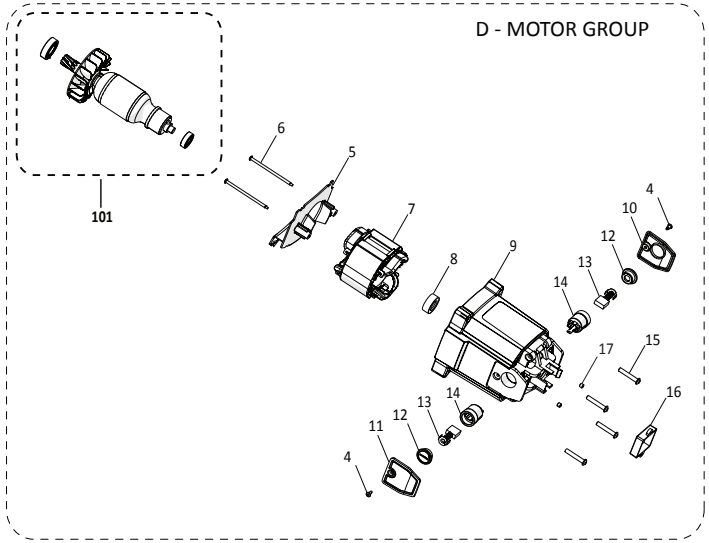

D - MOTOR GROUP

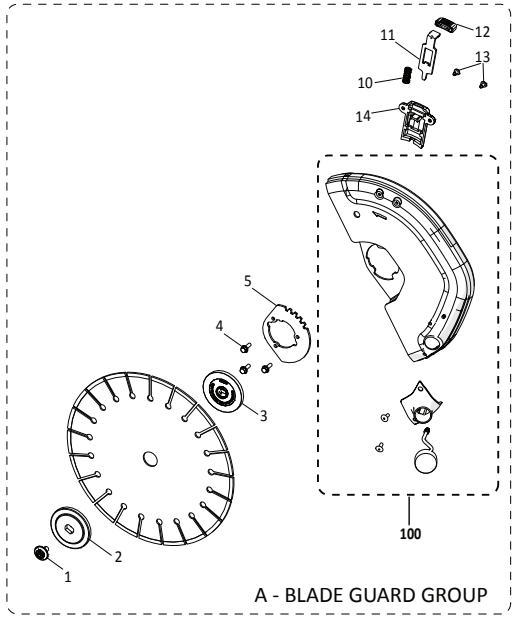

A - BLADE GUARD GROUP

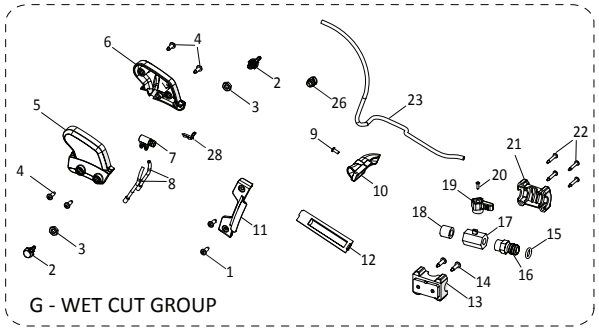

G - WET CUT GROUP

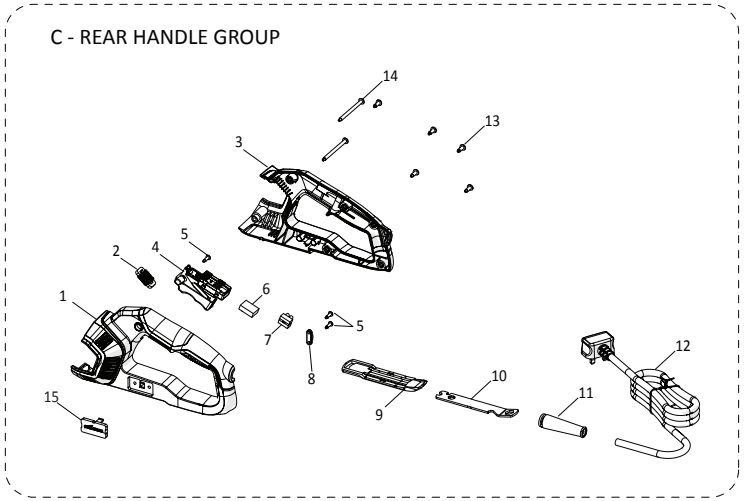

C - REAR HANDLE GROUP

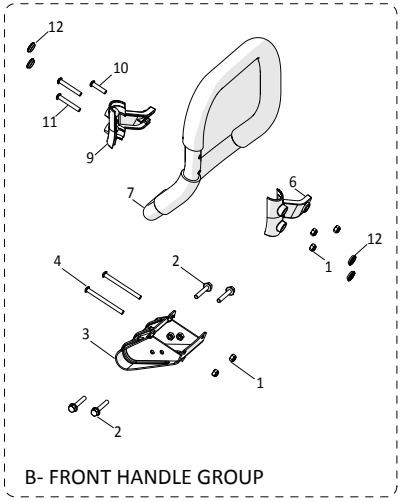

B- FRONT HANDLE GROUP

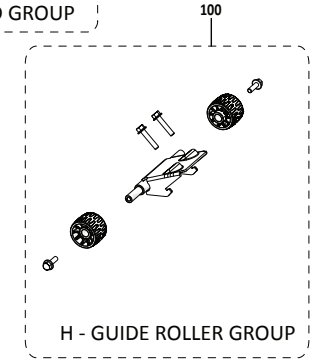

H - GUIDE ROLLER GROUP

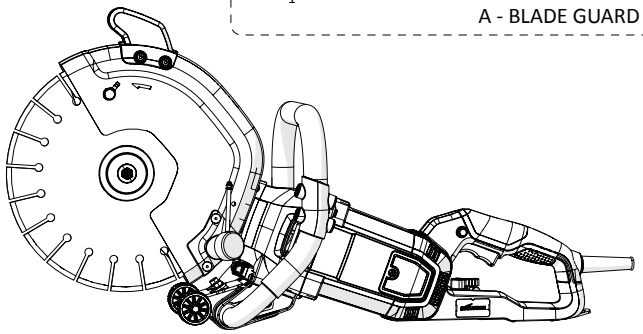

EVOLUTION
evolutionpowertools.com

Service Parts List	V: 012-0003A	230V EU
300mm Disc Cutter		

No.	Description	Part Code	Qty
A01	BLADE BOLT	012-0211	1
A02	FLANGE OUTER 70MM PRESSED	012-0203	1
A03	FLANGE INNER 70MM PM UK/EU (20/22.2MM)	012-0204	1
A04	SCREW HEX FLANGED STEEL BO M5 16MM	F-HFS-M5-16-ST-BO	3
A05	12" BLADE GUARD RETAINING PLATE	012-0119-A2	1
A10	12" BLADE GUARD ROTATION LOCK SPRING	012-0122-A1	1
A11	12" BLADE GUARD ROTATION LOCK TAB	012-0121-A2	1
A12	12" BLADE GUARD ROTATION LOCK KNOB	012-0124-A1	1
A13	SCREW BUTTON SELF-TAPPING TORX STEEL BO M5 10MM	F-TFPHT-5-10-ST-BO	2
A14	12" BLADE GUARD ROTATION LOCK COVER	012-0123-A3	1
A100	12" GUARD ASSEMBLY	012-0055	1
B01	NUT FULL NYLOC STEEL BO M6	F-NNIF-M6-ST-BO	5
B02	SCREW HEX FLANGED STEEL BO M6 16MM	F-HFS-M6-16-ST-BO	4
B03	SKID PLATE	012-0120-A2	1
B04	SCREW BUTTON TORX STEEL BO M6 70MM	F-SPHT-M6-70-ST-BO	2
B06	FRONT BALE HANDLE SUPPORT BRACKET BACK	012-0166-A1	1
B07	FRONT BALE HANDLE W / OVERMOULD	012-0181	1
B09	FRONT BALE HANDLE SUPPORT BRACKET FRONT	012-0165-A1	1
B10	SCREW CAP TORX STEEL BO M6 25MM	F-SPHT-M6-25-ST-BO	1
B11	SCREW CAP TORX STEEL BO M6 40MM	F-SPHT-M6-40-ST-BO	2
B12	FRONT HANDLE BRACKET SCREW CAP	012-0209	4
C01	REAR HANDLE RH	012-0153-1-A1	1
C02	RF CHOKE	012-0131	1
C03	REAR HANDLE LH	012-0152-1-A1	1
C04	TRIGGER SWITCH	012-0135	1
C05	SCREW BUTTON SELF-TAPPING TORX STEEL BO M4 15MM	F-TFPHT-M4-15-ST-BO	3
C06*	CAPACITOR 220-240V	012-0132	1
C07	WIRE BLOCK CONNECTOR	012-0136	1
C08	WIRE RESTRAINT SADDLE	012-0174-A1	1
C09	TOOL STORAGE HOUSING	012-0175-A1	1
C10	SPANNER	012-0176-A1	1
C11*	CABLE STRAIN RELIEF	012-0180-A1	1
C12*	CABLE EU 230V 4M RCD	012-0144	1
C13	SCREW BUTTON SELF-TAPPING TORX STEEL BO M5 15MM	F-TFPHT-M5-15-ST-BO	5
C14	SCREW BUTTON SELF-TAPPING TORX STEEL BO M5 70MM	F-TFPHT-M5-70-ST-BO	2
C15	REAR HANDLE LH WATER BLANKING PLATE	012-0158-A1	1
D04	SCREW BUTTON SELF-TAPPING TORX STEEL BO M4 10MM	F-TFPHT-4-10-ST-BO	2
D05	MOTOR FAN BAFFLE	012-0130-A1	1
D06	SCREW BUTTON SELF-TAPPING TORX STEEL BO M4 70MM	F-TFPHT-M4-70-ST-BO	2
D07*	FIELD COIL 2400W 220-240V	012-0195	1
D08	REAR MOTOR BEARING BUSH	012-0173-A1	1
D09	MOTOR HOUSING	012-0151-A1	1
D10	BRUSH COVER CAP LH	012-0154-A1	1
D11	BRUSH COVER CAP RH	012-0155-A1	1
D12	BRUSH HOLDER SCREW CAP	010-0160	2
D13*	CARBON BRUSH 220-240V	012-0172-A1	2
D14	BRUSH HOLDER	012-0168-A1	2
D15	SCREW BUTTON TORX STEEL BO M6 25MM	F-SPHT-M6-25-ST-BO	4
D16*	SOFT START PCB 220-240V	012-0148	1
D17	SET SCREW FLAT POINT STEEL BO M6 8MM	F-SSCFP-M6-8-ST-BO	2
D101	2400W ARMATURE ASSEMBLY 230V EU/UK/AUS	012-0050	1
E01	SCREW COUNTERSUNK TORX STEEL BO M5 16MM	F-SCHT-M5-16-ST-BO	4
E02	HELICAL GEARBOX COVER	012-0103-A1	1
E03	SCREW BUTTON TORX STEEL BO M5 140MM	F-SPHT-M5-140-ST-BO	4
E04	CIRCLIP EXTERNAL HEAVY DUTY 12MM	F-CCEXT-12-100-ST-BO	1
E05	HELICAL GEAR	012-0106-A1	1
E06	WASHER WAVE 12.5ID 1.5H	F-WW-M12-ST-BO	1
E07	SCREW BUTTON TORX STEEL BO M6 16MM	F-SPHT-M6-16-ST-BO	2

No.	Description	Part Code	Qty
E08	FRONT HANDLE CLAMP MOUNT BRACKET	012-0127-A3	1
E09	6301-2Z BEARING BALL 37OD 12ID 12W	F-B-6301-2Z	2
E10	KEY WOODRUFF 4X4X12	012-0197	2
E11	DRIVE SHAFT	012-0111-A2	1
E12	HELICAL GEARBOX	012-0101-A1	1
E13	ARBOR LOCK PIN	012-0112-A2	1
E14	E-CLIP EXTERNAL HEAVY DUTY 10MM	F-ECLIP-10-080-ST-BO	1
E15	ARBOR LOCK SPRING	012-0113-A1	1
E17	BEVEL PINION	012-0107-A1	1
E18	NUT FULL FLANGED SERATED STEEL BO M8	F-NFS-M8-ST-BO	1
E19	BEVEL GEARBOX	012-0102-A1	1
E20	6200 BEARING BALL 30OD 10ID 09W	F-B-6200-2Z	1
E27	FRONT VENT LEFT	012-0207	1
E28	FRONT VENT RIGHT	012-0208	1
E29	SPRING WASHER M5	F-SWA-M5-ST-BO	8
E30	SCREW BUTTON TORX STEEL BO M5 16MM	F-SPHT-M5-16-ST-BO	8
E102	BEVEL GEARBOX ASSEMBLY	012-0060	1
G01	SCREW BUTTON SELF-TAPPING TORX STEEL BO M5 15MM	F-TFPHT-M5-15-ST-BO	2
G02	WATER BANJO PLASTIC	012-0210	2
G03	NUT HALF PLAIN STEEL BO M8	F-NSH-M8-ST-BO	2
G04	SCREW BUTTON SELF-TAPPING TORX STEEL BO M5 15MM	F-TFPHT-M5-15-ST-BO	4
G05	WATER OUTLET NOZZLE HANDLE LH	012-0170-A1	1
G06	WATER OUTLET NOZZLE HANDLE RH	012-0171-A1	1
G07	WATER TUBE MANIFOLD	012-0186	1
G08	BLADE GUARD WATER TUBE 6MM	012-0185-A1	2
G09	SCREW BUTTON TORX STEEL BO M4 25MM	F-SPHT-M4-25-ST-BO	1
G10	SKID PLATE WATER GUIDE	012-0125-A2	1
G11	GEARBOX WATER GUIDE	012-0201	1
G12	MOTOR HOUSING WATER GUIDE CHANNEL PLATE	012-0156-A1	1
G13	WATER VALVE HOUSING RH	012-0159-A1	1
G14	SCREW BUTTON SELF-TAPPING TORX STEEL BO M5 20MM	F-TFPHT-5-20-ST-BO	2
G15	WATER VALVE O-RING	012-0183-A1	1
G16	WATER VALVE HOSE ADAPTOR	012-0162-A1	1
G17	WATER VALVE	012-0192	1
G18	WATER VALVE TUBE ADAPTOR	012-0182-A1	1
G19	WATER VALVE TAP	012-0161-A1	1
G20	SCREW BUTTON TORX STEEL BO M3 10MM	F-SPHT-M3-10-ST-BO	1
G21	WATER VALVE HOUSING LH	012-0160-A1	1
G22	SCREW BUTTON SELF-TAPPING TORX STEEL BO M4 25MM	F-TFPHT-4-25-ST-BO	4
G23	WATER TUBE 10MM	012-0184-A1	1
G26	WATER TUBE HOOK	012-0202	1
G28	TUBE CLIP	012-0223	1
H100	TROLLEY ASSEMBLY	012-0213	1

No.	Description	Part Code	Qty

Service Parts List | **V: 012-0003A**

300mm Disc Cutter

230V EU