R255
DCT

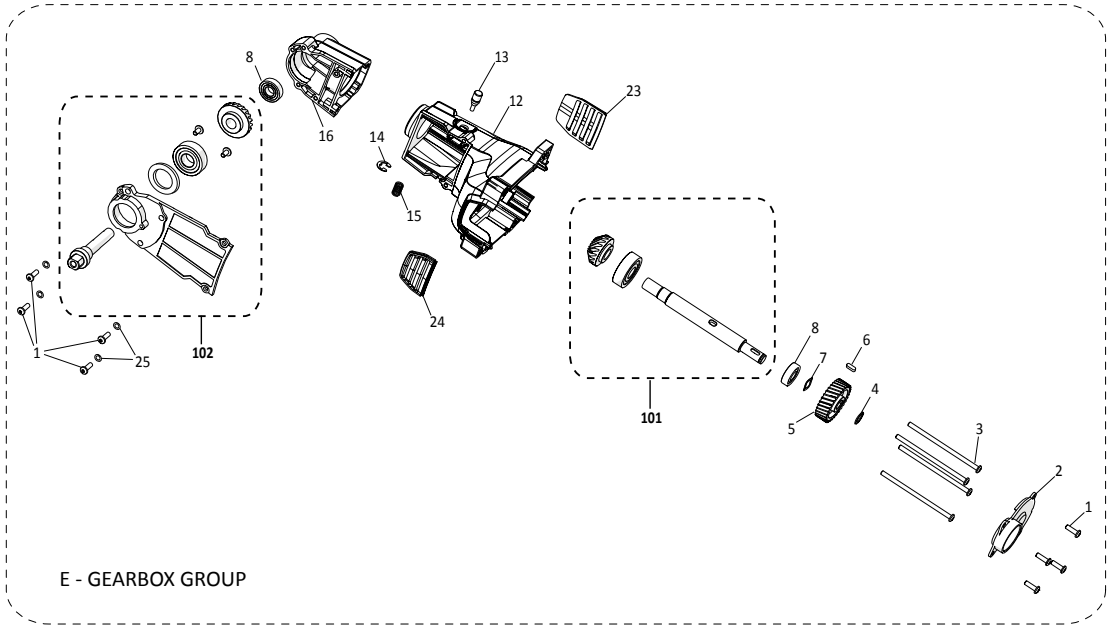

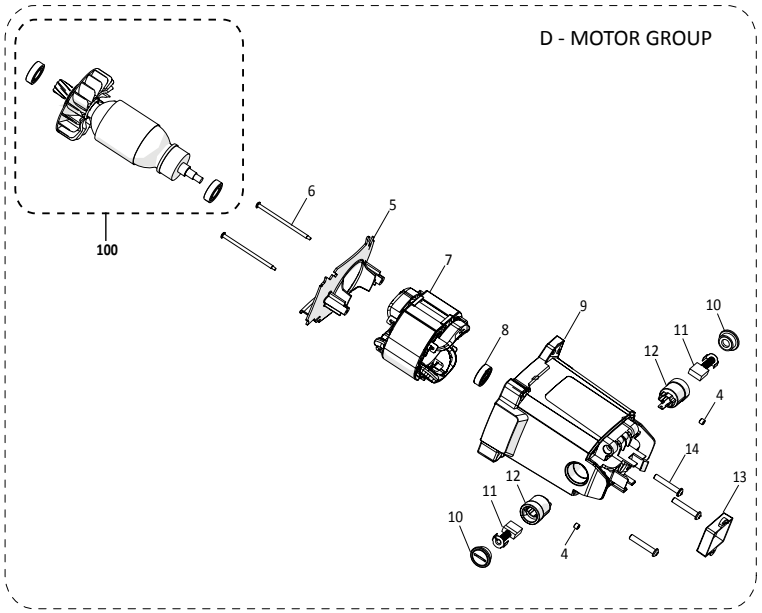

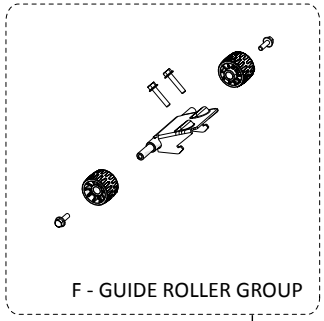

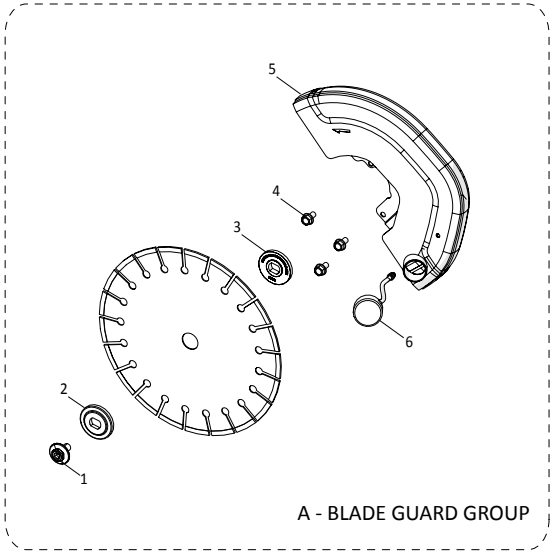

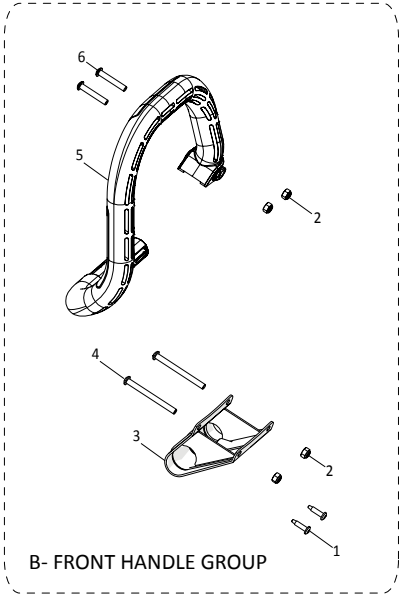

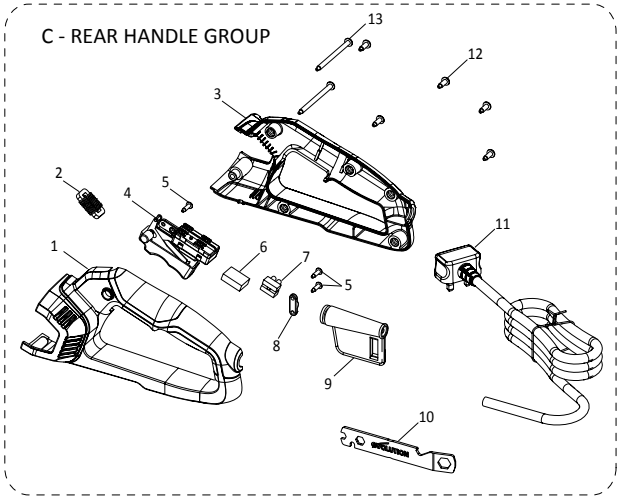

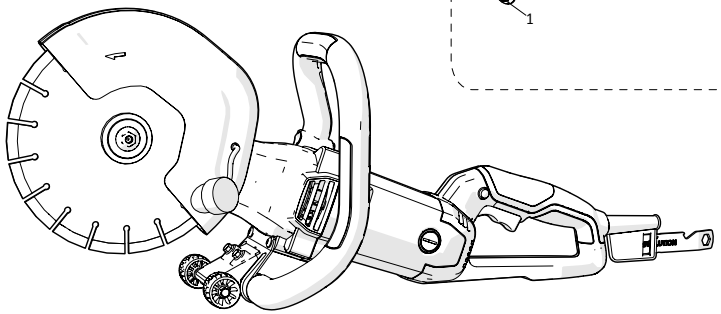

evolution
evolutionpowertools.com

Service Parts List	V: 010-0001	230V UK
255mm Disc Cutter		

No.	Description	Part Code	Qty
A01	Blade Bolt	012-0211	1
A02	Flange Outer 45mm Pressed	010-0114-A1	1
A03	Flange Inner 45mm Pm	010-0113-A1	1
A04	Screw Hex Flanged Steel Bo M5 16mm	F-HFS-M5-16-ST-BO	3
A05*	255mm Blade Guard	010-0150-A1	1
A06	Dust Port Cap	010-0162-A1	1
B01	Screw Button Self-Tapping Torx Steel Bo M5 20mm	F-TFPHT-5-20-ST-BO	2
B02	Nut Full Nyloc Steel Bo M6	F-NNIF-M6-ST-BO	4
B03	Skid Plate	010-0157-A1	1
B04	Screw Button Torx Steel Bo M6 70mm	F-SPHT-M6-70-ST-BO	2
B05	Front Bale Handle	010-0159-A1	1
B06	Screw Button Torx Steel Bo M6 35mm	F-SPHT-M6-35-ST-BO	2
C01	Rear Handle Lh	010-0152-A1	1
C02	Rf Choke	010-0146	1
C03	Rear Handle Rh	010-0153-A1	1
C04	Trigger Switch	012-0135	1
C05	Screw Button Self-Tapping Torx Steel Bo M4 15mm	F-TFPHT-4-15-ST-BO	3
C06*	Capacitor 220-240v	010-0118	1
C07	Wire Block Connector	010-0120	1
C08	Wire Restraint Saddle	012-0174-A1	1
C09*	Cable Strain Relief	010-0156-A1	1
C10	Spanner	012-0176-A1	1
C11*	Cable Uk 230v 4m	010-0126	1
C12	Screw Button Self-Tapping Torx Steel Bo M5 15mm	F-TFPHT-5-15-ST-BO	5
C13	Screw Button Self-Tapping Torx Steel Bo M5 70mm	F-TFPHT-5-70-ST-BO	2
D04	Set Screw Flat Point Steel Bo M6 5mm	F-SSCFP-M6-5-ST-BO	2
D05	Motor Fan Baffle	010-0116-A1	1
D06	Screw Button Self-Tapping Torx Steel Bo M4 75mm	F-TFPHT-4-75-ST-BO	2
D07*	Field Coil 2000w 220-240v	010-0135	1
D08	Rear Motor Bearing Bush	012-0173-A1	1
D09	Motor Housing	010-0151-A1	1
D10	Brush Holder Screw Cap	010-0160	2
D11*	Carbon Brush 220-240v	012-0172-A1	2
D12	Brush Holder	012-0168-A1	2
D13*	Soft Start Pcb 220-240v	010-0137	1
D14	Screw Button Torx Steel Bo M6 25mm	F-SPHT-M6-25-ST-BO	3
D100	2000w Armature Assembly 230v Eu/Uk/Aus	010-0050	1
E01	Screw Button Torx Steel Bo M5 16mm	F-SPHT-M5-16-ST-BO	8
E02	Helical Gearbox Cover	010-0103-A1	1
E03	Screw Button Torx Steel Bo M5 100mm	F-SPHT-M5-100-ST-BO	4
E04	Circlip External Heavy Duty 12mm	F-CCEXT-12-100-ST-BO	1
E05	Helical Gear	010-0106-A1	1
E06	Key Woodruff 4x4x12	010-0139	1
E07	Washer Wave 12.5id 1.2h	F-WW-M12-ST-BO	1
E08	6001-2z Bearing Ball 28od 12id 08w	F-B-6001-2Z	2
E12	Helical Gearbox	010-0101-A1	1
E13	Arbor Lock Pin	010-0111-A1	1
E14	E-Clip External Heavy Duty 10mm	F-ECLIP-10-100-ST-BO	1
E15	Arbor Lock Spring	012-0113-A1	1
E16	Bevel Gearbox	010-0102-A2	1
E23	Front Vent Left	010-0163	1
E24	Front Vent Right	010-0164	1
E25	M5 Spring Washer	F-SWA-M5-ST-BO	4
E101	Drive Shaft Assembly	010-0060	1
E102	Bevel Gearbox Assembly	010-0061	1
F100	Trolley Assembly	010-0172	1

No.	Description	Part Code	Qty

No.	Description	Part Code	Qty

Service Parts List | **V: 010-0001**

255mm Disc Cutter

230V UK